SPANN-BOX® SIZE 1

Three tension pressure settings

Spann-Box® size 1 is available in several variants. The robust design with its steel housing guarantees durability and reliable operation. We offer a total of five different designs to meet individual requirements.

		Light	Heavy
Tension force	1 released spring	58 – 32 N	132 – 60 N
	2 released springs	116 – 64 N	264 – 120 N
	3 released springs	174 – 96 N	396 – 180 N
	Tensioning distance	40 mm	40 mm

Reverse operation

If the running direction changes, we recommend using the appropriate Spann-Box® size with a long housing. We deliver this variant with heavy tension force.

SPANN-BOX® SIZE 1

with arc segment profile

15 mm 40 mm 67 mm

Tensioning pressure

- Choice of light or heavy spring force

Attachment

- Installed underneath the chain
- Bore holes in the housing (for matching fastening brackets refer to pages 124 – 125)

DIN 8187 chain no.	B mm	Short housing, light tension force article no.	Short housing, heavy tension force article no.	Long housing, heavy tension force article no.	Stainless steel, heavy tension force, short housing article no.	Stainless steel, heavy tension force, long housing article no.
≤06B-1 (U-Profile)	20	281 010 001	281 010 002	281 010 202	282 010 002	282 010 202
08B-1	20	281 010 003	281 010 004	281 010 204	282 010 004	282 010 204
10B-1	20	281 010 005	281 010 006	281 010 206	282 010 006	282 010 206
12B-1	20	281 010 007	281 010 008	281 010 208	282 010 008	282 010 208
16B-1	20	281 010 009	281 010 010	281 010 210	282 010 010	282 010 210
20B-1	20	281 010 011	281 010 012	281 010 212	282 010 012	282 010 212
06B-2	20	281 010 013	281 010 014	281 010 214	282 010 014	282 010 214
08B-2	20	281 010 015	281 010 016	281 010 216	282 010 016	282 010 216
10B-2	25	281 010 017	281 010 018	281 010 218	282 010 018	282 010 218
12B-2	30	281 010 019	281 010 020	281 010 220	282 010 020	282 010 220
16B-2	45	281 010 021	281 010 022	281 010 222	282 010 022	282 010 222
06B-3	25	281 010 023	281 010 024	281 010 224	282 010 024	282 010 224
08B-3	30	281 010 025	281 010 026	281 010 226	282 010 026	282 010 226
10B-3	40	281 010 027	281 010 028	281 010 228	282 010 028	282 010 228
12B-3	45	281 010 029	281 010 030	281 010 230	282 010 030	282 010 230

Special designs on request

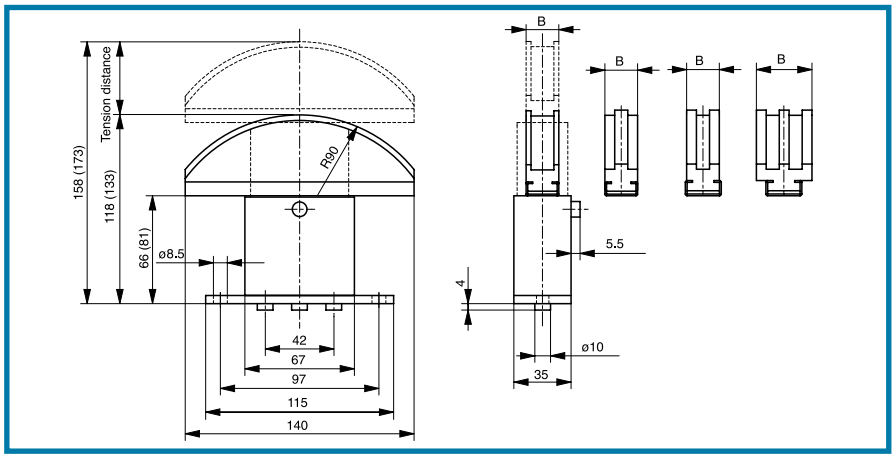

Clamp dimensions (...) for long housing